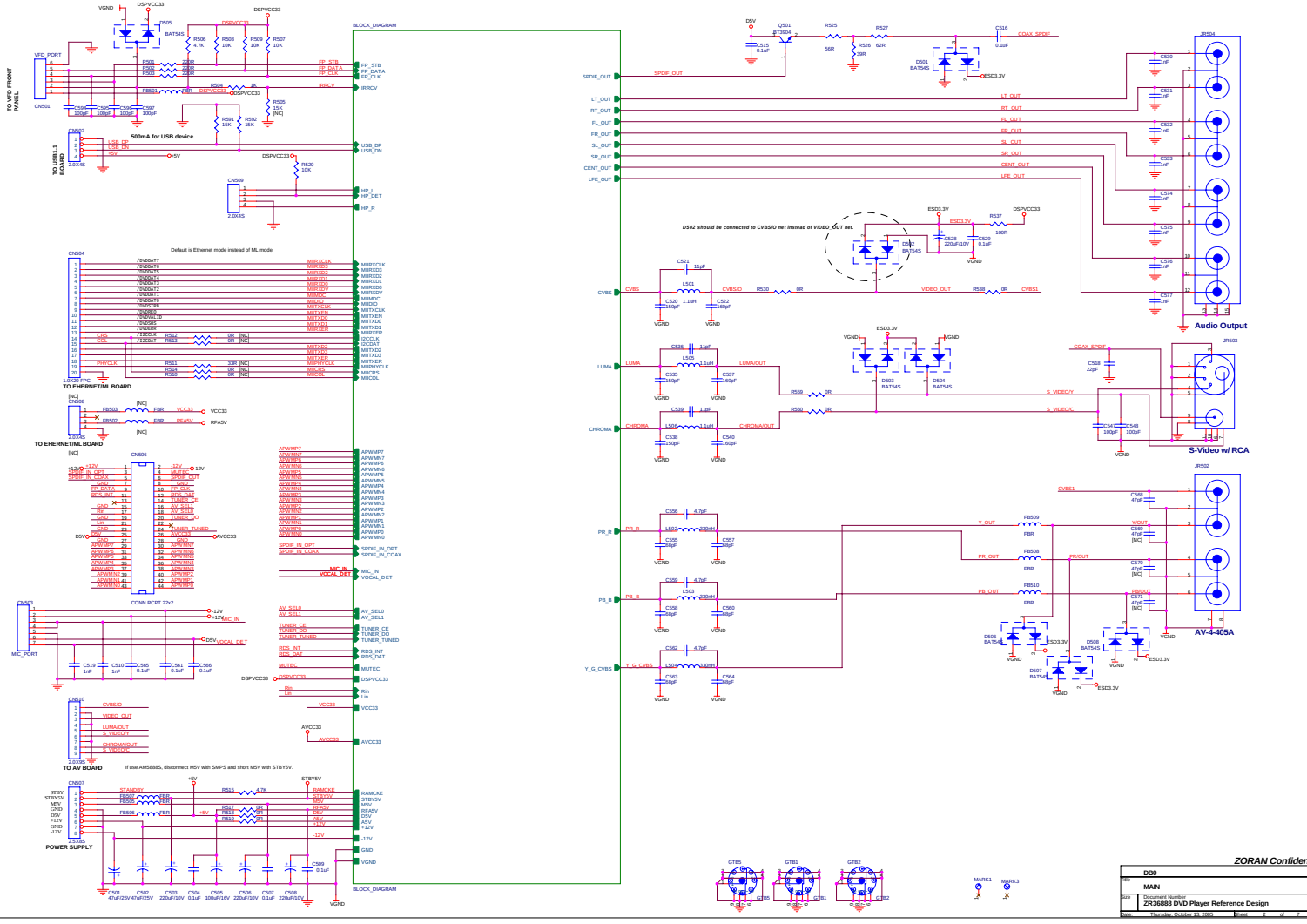
TO VFD FRONT PANEL
VFD_PORT
CN501
500mA for USB device
TO USB1.1 BOARD
CN502
CN503
Default is Ethernet mode instead of ML mode.
CN504
TO EHERNET/ML BOARD
CN508
TO EHERNET/ML BOARD
CN506
CONN RCPT 22x2
CN509
MIC_PORT
CN510
TO AV BOARD
If use AM5888S, disconnect M5V with SMPS and short M5V with STBY5V.
CN507
POWER SUPPLY
BLOCK_DIAGRAM
D502 should be connected to CVBS/O net instead of VIDEO_OUT net.
Audio Output
S-Video w/ RCA
AV-4-405A
ZORAN Confidential
DB0
MAIN
ZR36888 DVD Player Reference Design
Thursday, October 13, 2005

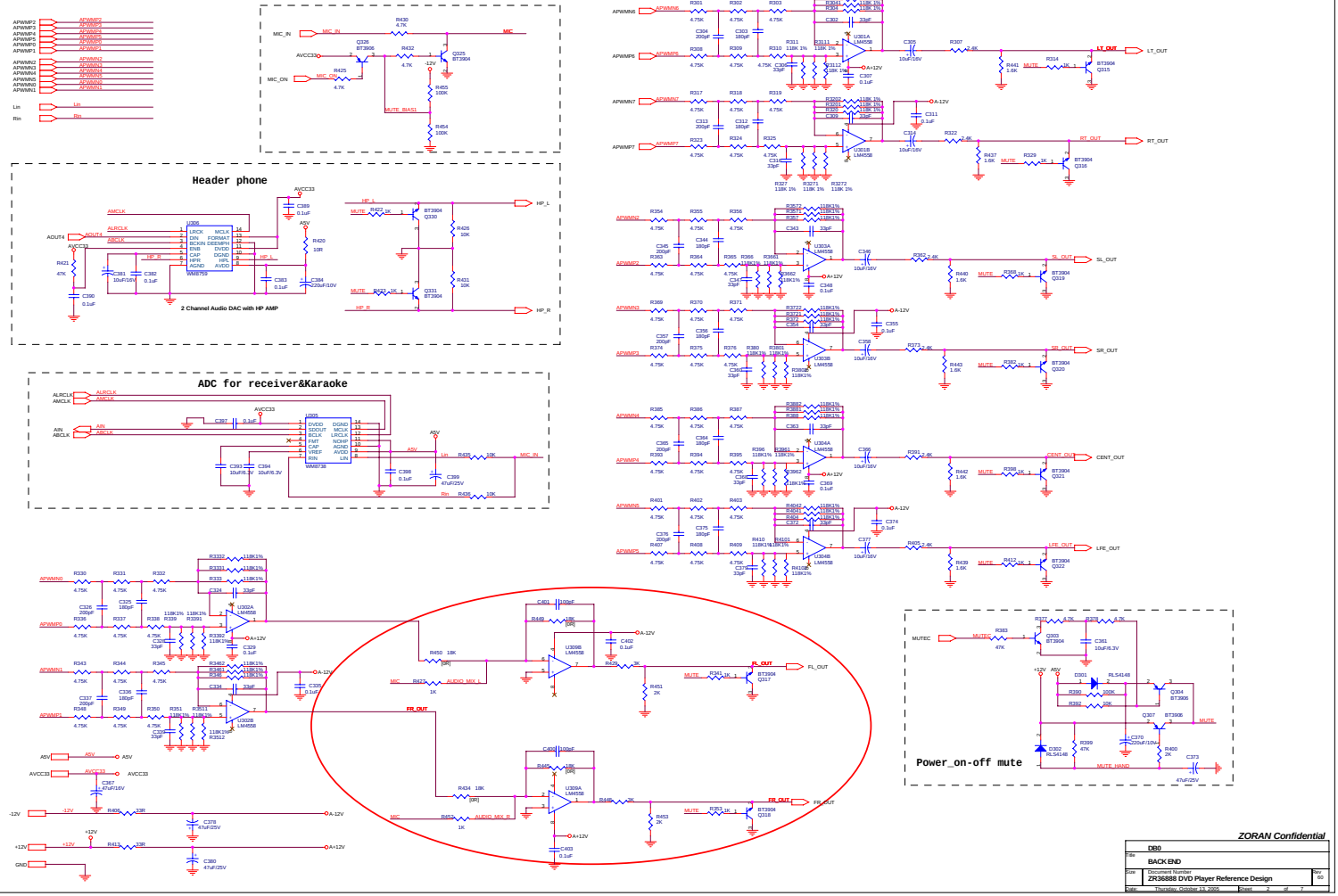
Header phone
2 Channel Audio DAC with HP AMP
ADC for receiver&Karaoke
Power_on-off mute
ZORAN Confidential
DB0
BACK END
ZR36888 DVD Player Reference Design
Thursday, October 13, 2005

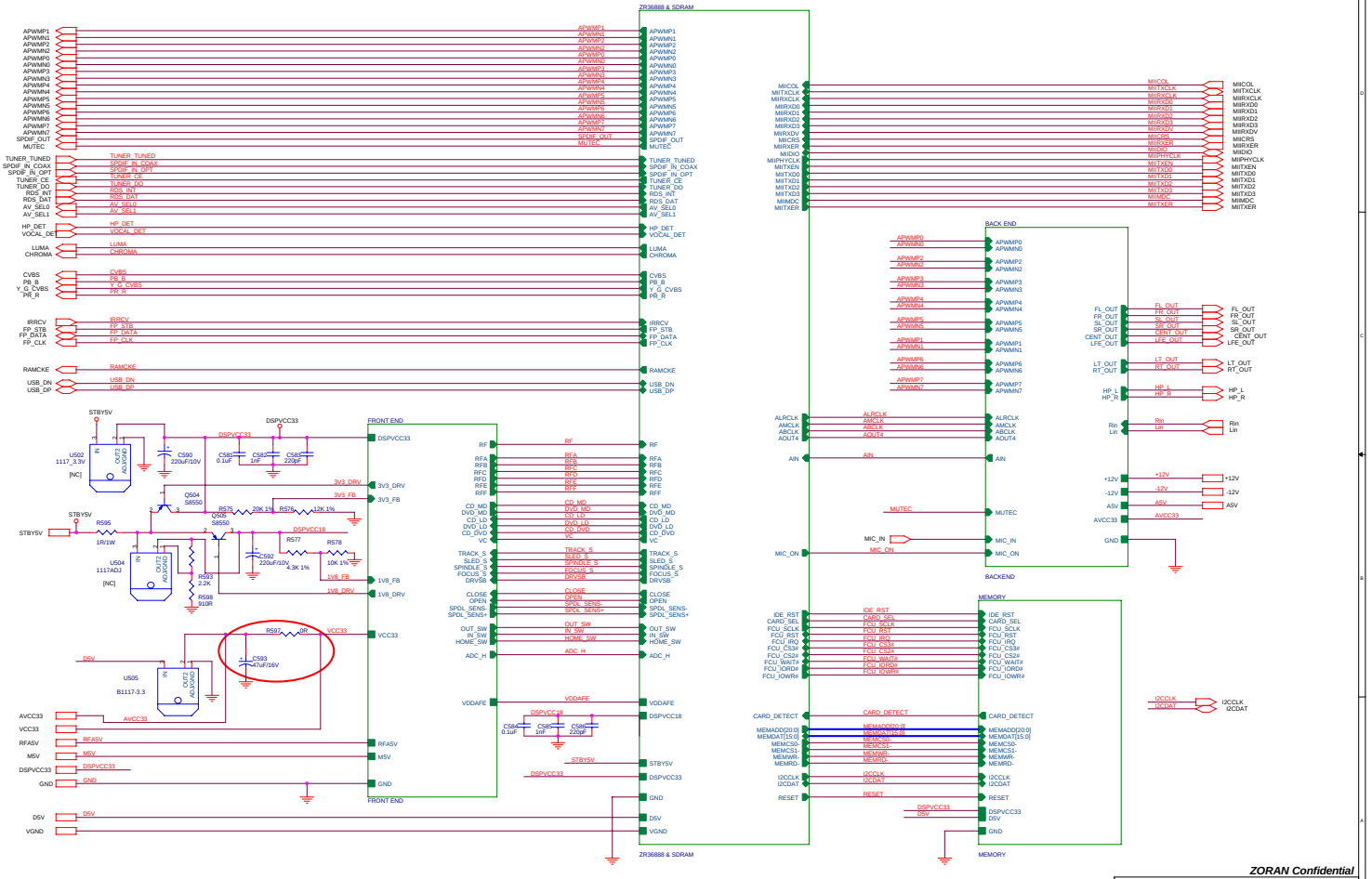
ZR36888 & SDRAM
FRONT END
BACK END
BACKEND
MEMORY
APWMP1
APWMN1
APWMP2
APWMN2
APWMP0
APWMN0
APWMP3
APWMN3
APWMP4
APWMN4
APWMP5
APWMN5
APWMP6
APWMN6
APWMP7
APWMN7
SPDIF_OUT
MUTEC
TUNER_TUNED
SPDIF_IN_COAX
SPDIF_IN_OPT
TUNER_CE
TUNER_DO
RDS_INT
RDS_DAT
AV_SEL0
AV_SEL1
HP_DET
VOCAL_DET
LUMA
CHROMA
CVBS
PB_B
Y_G_CVBS
PR_R
IRRCV
FP_STB
FP_DATA
FP_CLK
RAMCKE
USB_DN
USB_DP
MIICOL
MIITXCLK
MIIRXCLK
MIIRXD0
MIIRXD1
MIIRXD2
MIIRXD3
MIIRXDV
MIICRS
MIIRXER
MIIDIO
MIIPHYCLK
MIITXEN
MIITXD0
MIITXD1
MIITXD2
MIITXD3
MIIMDC
MIITXER
FL_OUT
FR_OUT
SL_OUT
SR_OUT
CENT_OUT
LFE_OUT
LT_OUT
RT_OUT
HP_L
HP_R
Rin
Lin
+12V
-12V
ASV
AVCC33
GND
ALRCLK
AMCLK
ABCLK
AOUT4
AIN
MUTEC
MIC_IN
MIC_ON
IDE_RST
CARD_SEL
FCU_SCLK
FCU_RST
FCU_IRQ
FCU_CS3#
FCU_CS2#
FCU_WAIT#
FCU_IORD#
FCU_IOWR#
CARD_DETECT
MEMADD[20:0]
MEMDAT[15:0]
MEMCS0-
MEMCS1-
MEMWR-
MEMRD-
I2CCLK
I2CDAT
RESET
DSPVCC33
DSV
VCC33
RFASV
MSV
VDDAFE
DSPVCC18
STBYSV
VGND
STBYSV
DSPVCC33
FRONT END
RF
RFA
RFB
RFC
RFD
RFE
RFF
CD_MD
DVD_MD
CD_LD
DVD_LD
CD_DVD
VC
TRACK_S
SLED_S
SPINDLE_S
FOCUS_S
DRVSB
CLOSE
OPEN
SPDL_SENS-
SPDL_SENS+
OUT_SW
IN_SW
HOME_SW
ADC_H
3V3_DRV
3V3_FB
1V8_FB
1V8_DRV
VCC33
RFASV
MSV
GND
U502
1117_3.3V
[NC]
C590
220uF/10V
C581
0.1uF
C582
1nF
C583
220pF
Q504
S8550
R575
20K 1%
R576
12K 1%
Q505
S8550
R595
1R/1W
U504
1117ADJ
[NC]
R593
2.2K
R598
910R
R577
4.3K 1%
R578
10K 1%
C592
220uF/10V
R597
0R
C593
47uF/16V
U505
B1117-3.3
C584
0.1uF
C585
1nF
C586
220pF
ZORAN Confidential
DB0
DIAGRAM
Title
Size
Document Number
ZR36888 DVD Player Reference Design
Rev
60
Date:
Wednesday, October 19, 2005
Sheet
3
of
7

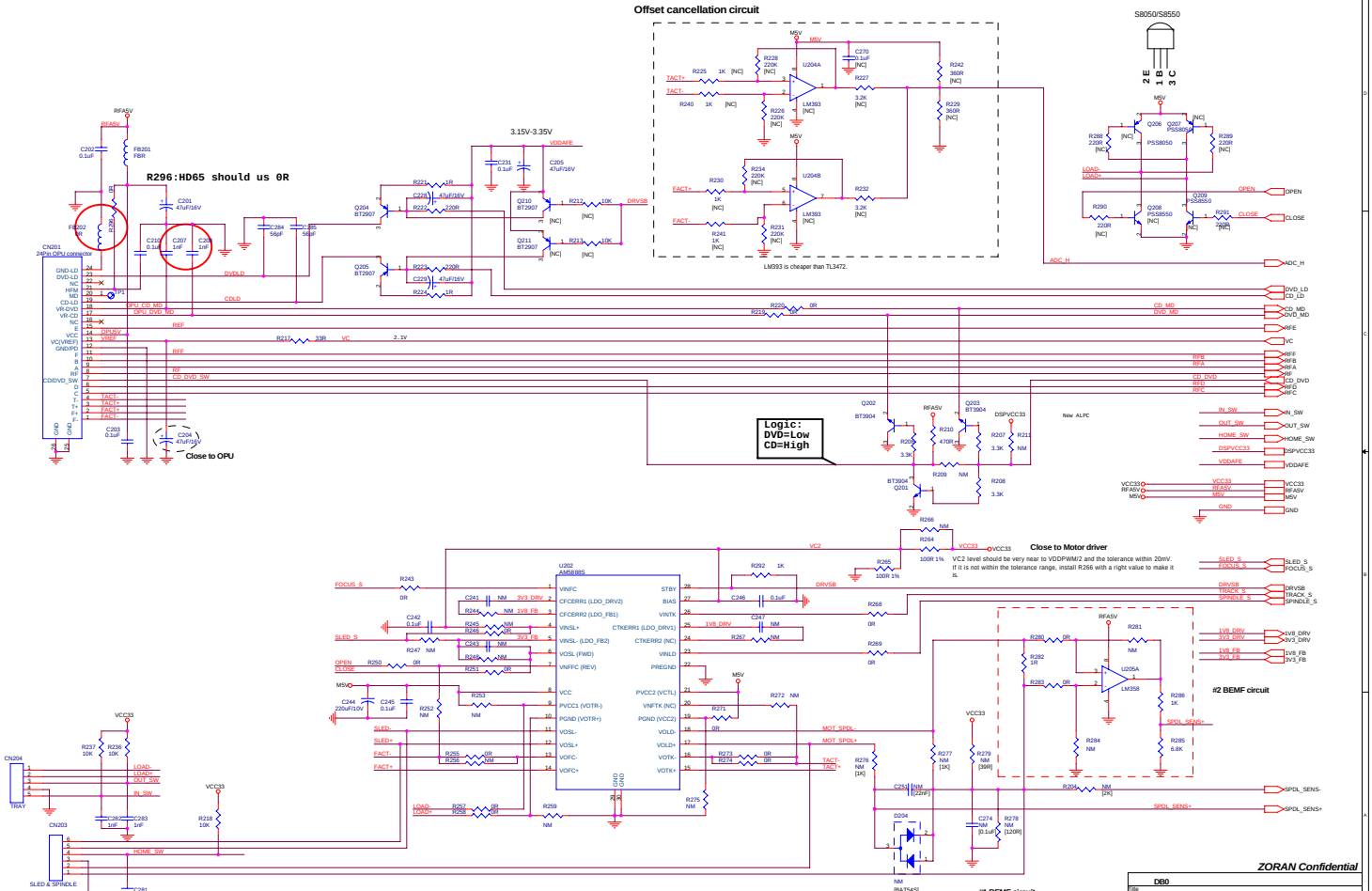

ZORAN Confidential

	DB0
Title	FRONT END
Size / Document Number	ZR36888 DVD Player Reference Design
Rev	60
Date: Tuesday, October 18, 2005	Sheet 7 of 7

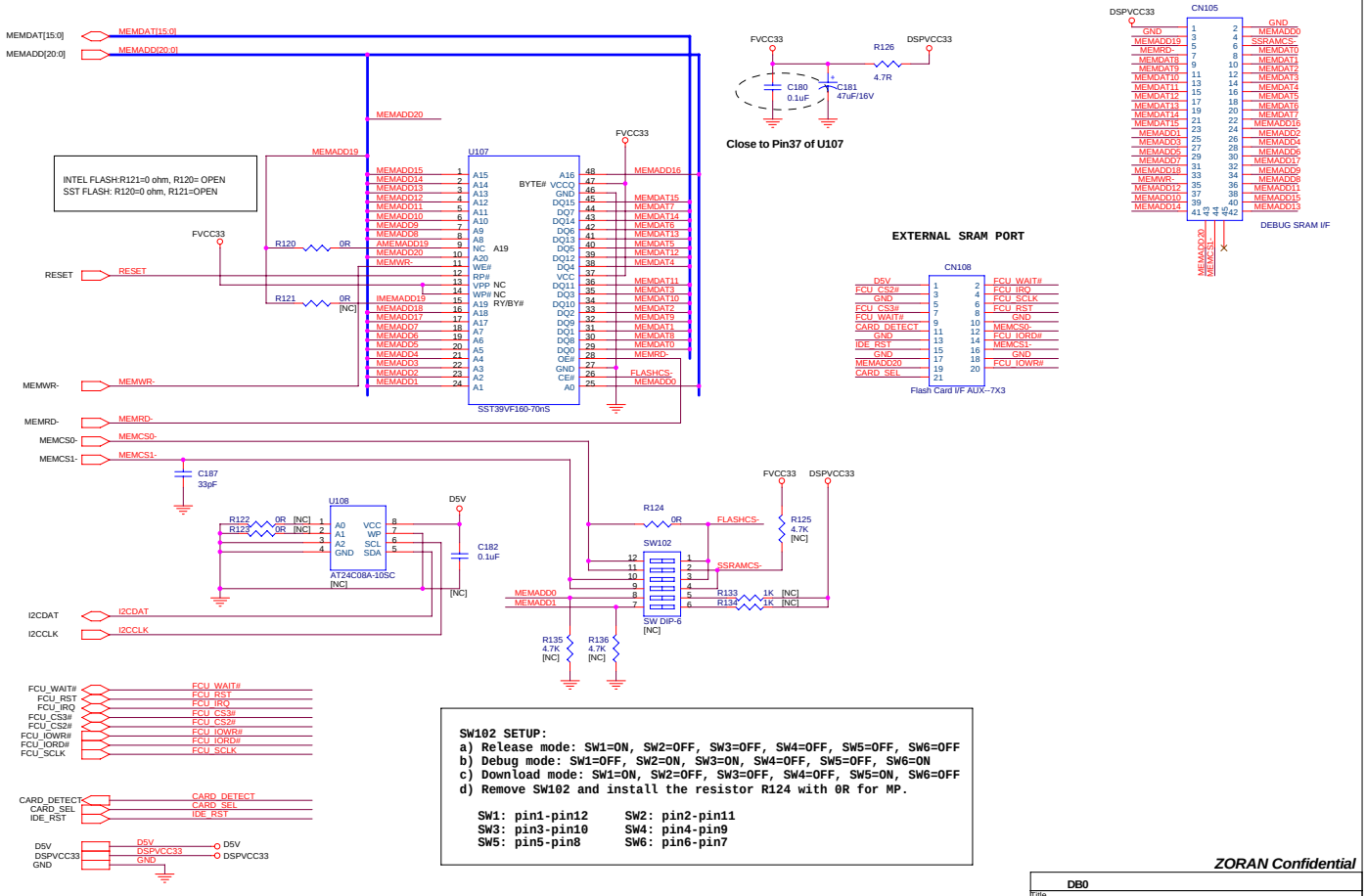

ZORAN Confidential

Title	DB0
	MEMORY
Size	Document Number: ZR36888 DVD Player Reference Design — Rev 60
Date: Wednesday, October 19, 2005	Sheet 5 of 7

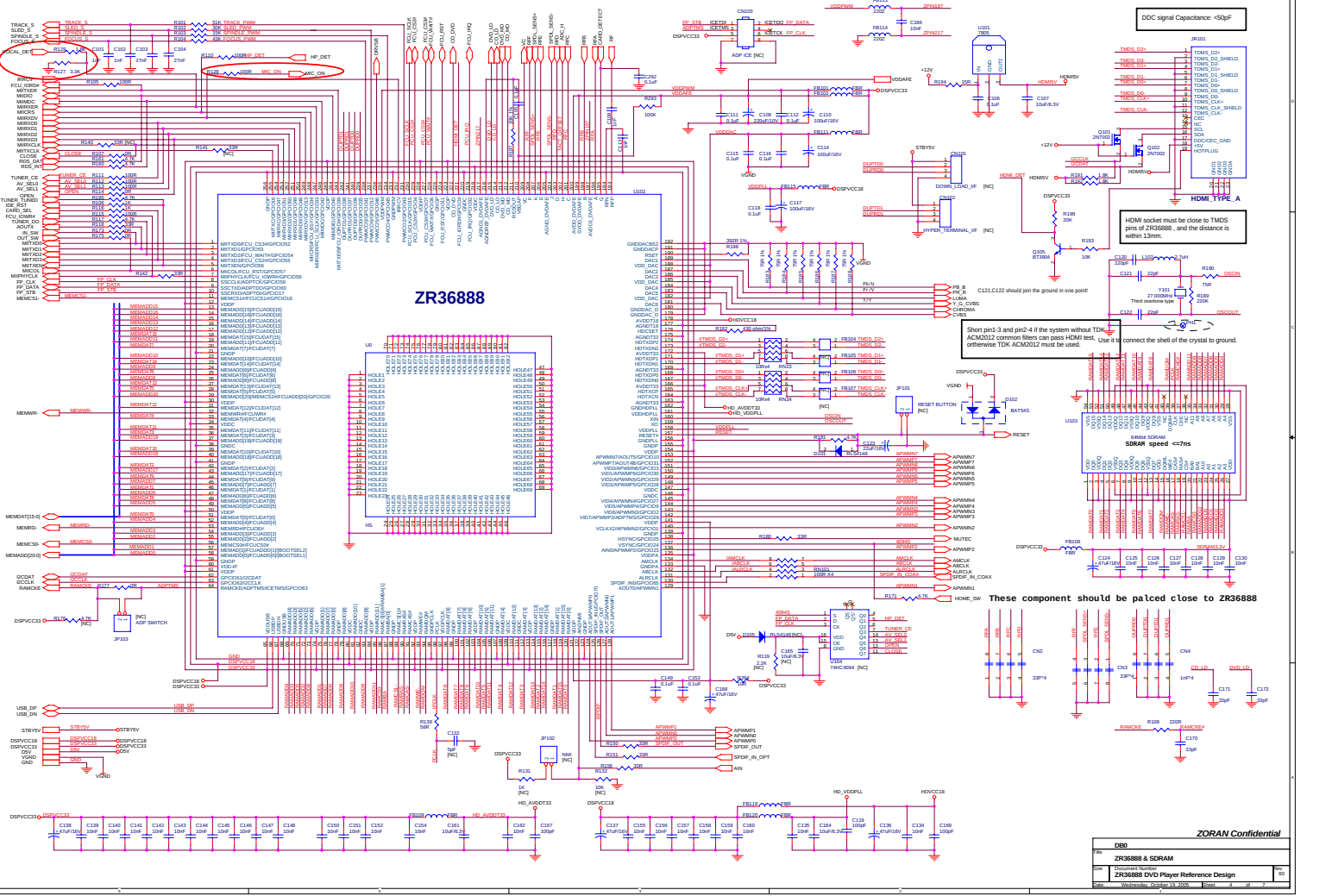
ZR36888
DDC signal Capacitance: <50pF
HDMI_TYPE_A
HDMI socket must be close to TMDS pins of ZR36888 , and the distance is within 13mm.
Short pin1-3 and pin2-4 if the system without TDK-ACM2012 common filters can pass HDMI test. Use it to connect the shell of the crystal to ground. otherwise TDK ACM2012 must be used.
C121,C122 should join the ground in one point!
SDRAM speed <=7ns
These component should be palced close to ZR36888
ADP ICE [NC]
ADP SWITCH
RESET BUTTON [NC]
HYPER_TERMINAL_IF [NC]
DOWN_LOAD_IF [NC]
ZORAN Confidential
DB0
ZR36888 & SDRAM
ZR36888 DVD Player Reference Design
Wednesday, October 19, 2005